The modular static scheduling problem [a]

Marc Pouzet

École normale supérieure

Marc.Pouzet@ens.fr

MPRI

Course notes

October 2021

[a] Joint work with Pascal Raymond (VERIMAG, Grenoble)

Code Generation for Synchronous Block-diagram

The problem

- **Input:** a *parallel* data-flow network made of synchronous operators. E.g., LUSTRE, SCADE, SIMULINK
- **Output:** a sequential procedure (e.g., C, Java) to compute one step of the network: *static scheduling*

Examples: (SCADE and SIMULINK)

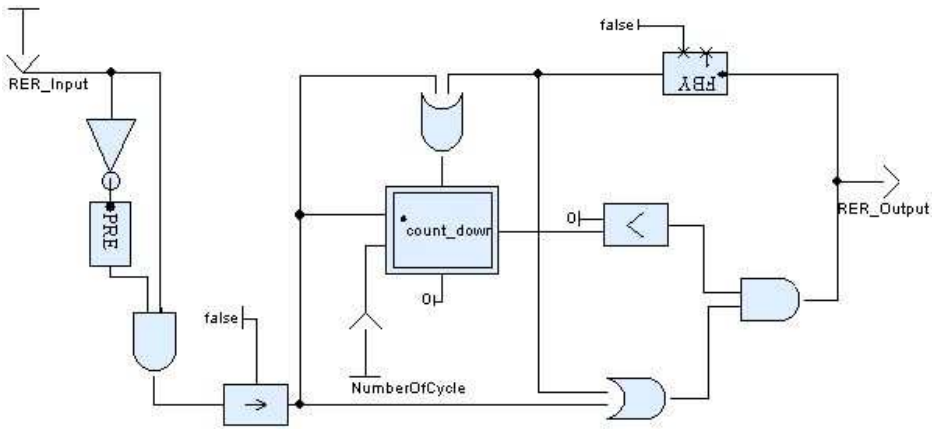

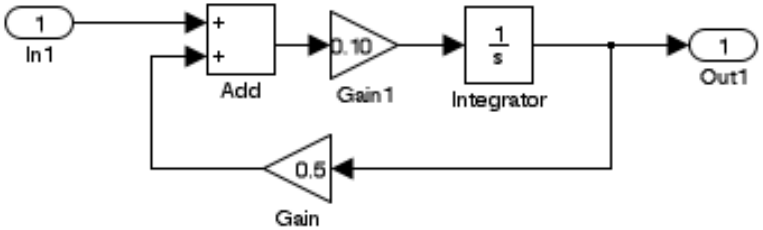

This is part of a more general question

How to *"compile the parallelism"*, i.e., generate seq. code which:

- preserves the parallel semantics,
- treats all programs with no ad-hoc restriction.

Why sequentializing a parallel program?

- Often far more efficient that the parallel version.
- Get a *time predictable implementation* (real-time system).
- At the moment, tools for analysing the Worst Case Execution Time (WCET) work well for sequential code only.

This is not contradictory with the question of generating parallel code. Both questions are interesting.

Abstract Data-flow Network and Scheduling

Whatever be the language, a data-flow network is made of:

- *instantaneous* nodes which need their current input to produce their current output. E.g., combinatorial operators.

  ↪ atomic *actions*, (partially) ordered by data-dependency

- *delay* nodes whose output depend on the previous value of their input. E.g., `pre` of SCADE, $1/z$ and integrators in SIMULINK, etc.

  ↪ state variables + 2 side-effect actions read (set) and update (get)

  ↪ reverse dependency (and allow feed back)

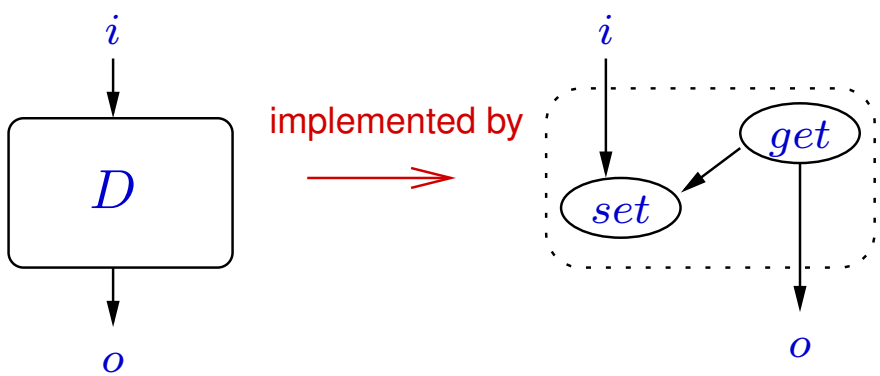

A simple example with a feedback loop

Consider the following Lustre function.

```
node fnode(a, b: ty) returns (x, y: ty);
  let
    y = f(x, z);
    z = D(y);
  tel;
```

- f is an instantaneous node;
- D is a delay node: it can produce its output *before* it reads its input.

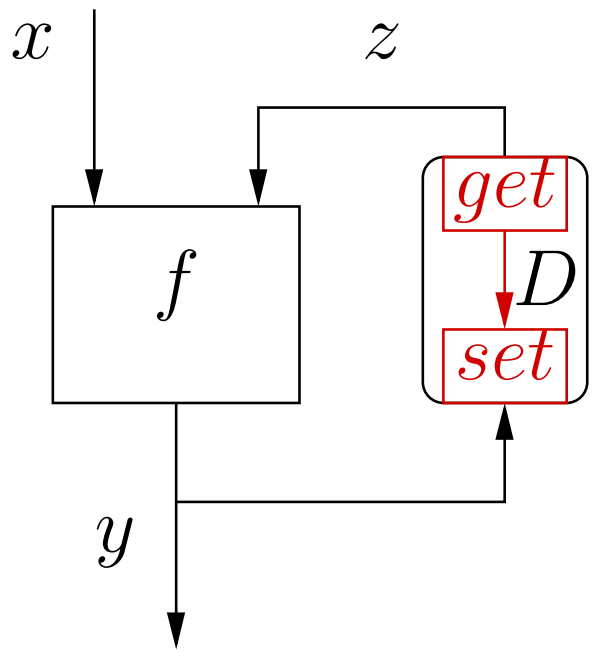

Possible sequential code:

$$z = D.get()$$

$$y = f(x, z)$$

$$D.set(y)$$

Consider the following Lustre function.

```
node fnode(a, b:ty) returns (x, y:ty);
  let
    x = j(a, f(D(a), b);
    y = h(b)
  tel;
```

- i, j and h are instantaneous nodes; D is a delay node.

Sequential Code Generation

Build a static schedule from a partial ordered set of actions

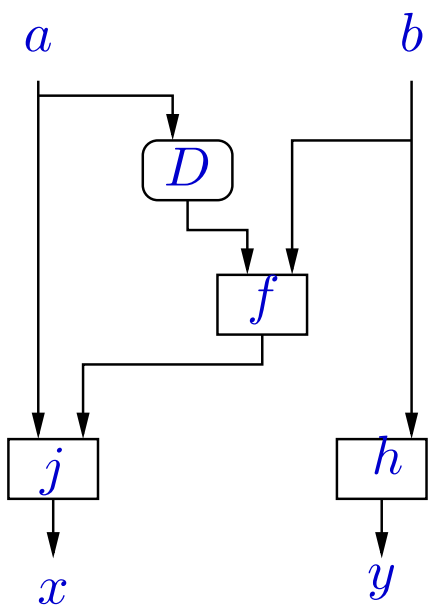

Sequential Code Generation

Build a static schedule from a partial ordered set of actions

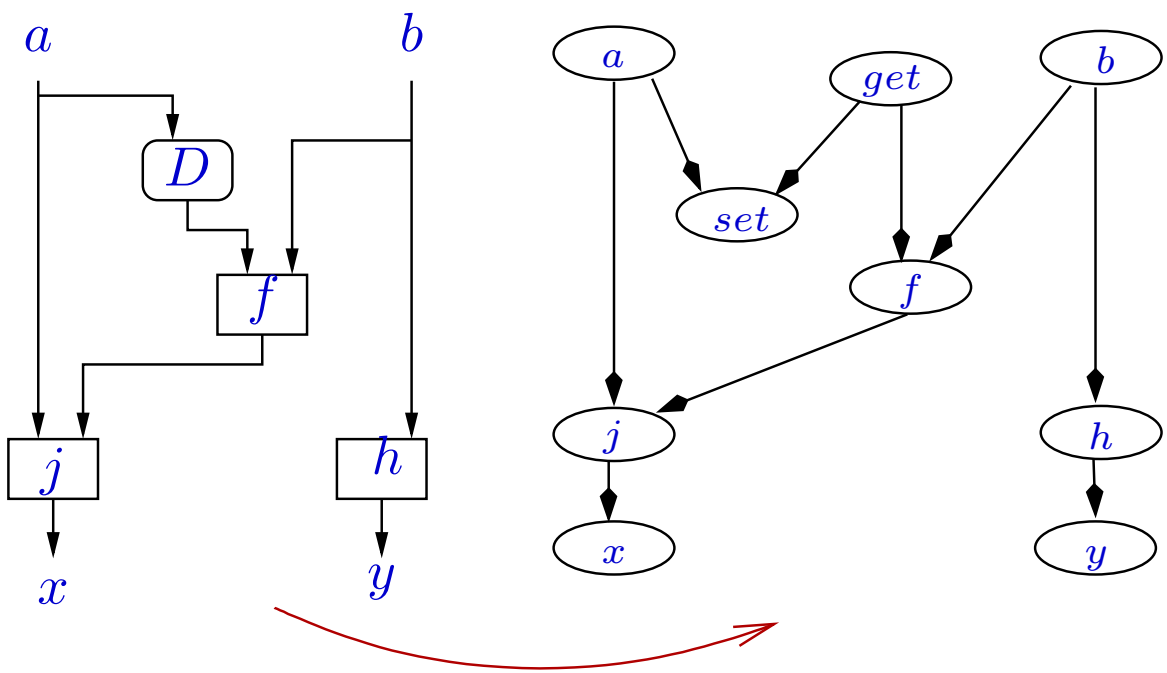

(partially) ordered set of actions

Sequential Code Generation

Build a static schedule from a partial ordered set of actions

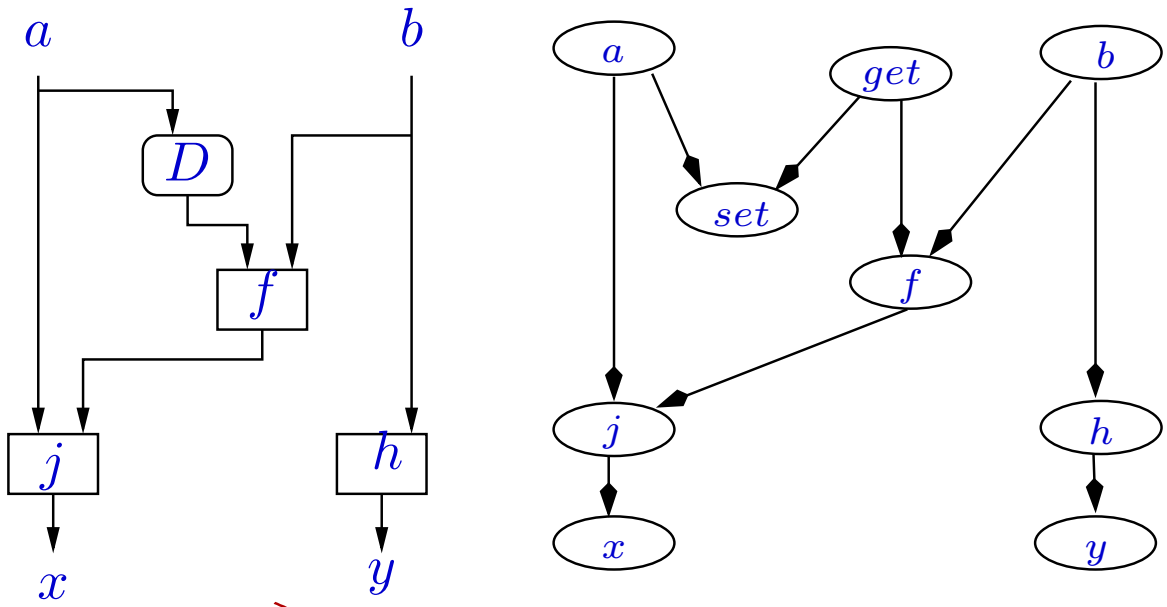


```
proc Step () {
  a ;
  b ;
  get ;
  f ;
  set ;
  j ;
  x ;
  h ;
  y ;
}
```

(partially) ordered set of actions

(one of the) correct sequential code

Modularity and Feedback

Modularity: a user defined node can be reused in another network

The problem with feedback loops

- this feedback is correct in a *parallel implementation*
- no *sequential single step procedure* can be used

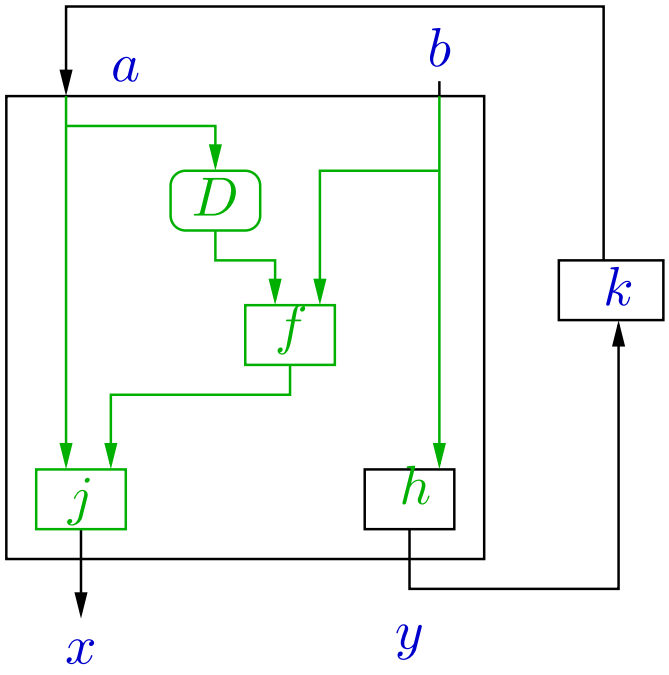

Modularity and Feedback: classical approaches

- Black-boxing: user-defined nodes are considered as *instantaneous*, whatever be their actual input/output dependencies
  - ↪ compilation is modular
  - ↪ rejects causally correct feed-back;
  - ↪ E.g., Lucid Synchrone, SCADE, Simulink
- White-boxing: nodes are recursively *inlined* in order to schedule only atomic nodes
  - ↪ Any correct feed-back is allowed but modular compilation is lost
  - ↪ E.g., Academic Lustre compiler; on user demand in SCADE via *inline* directives.
- Grey-boxing?

Grey-boxing

Some actions can be gathered without forbidding correct feedback loops:

- find such a *(minimal) set of blocks* together with their inter-dependencies:

  this is called the *(Optimal) Static Scheduling Problem*

- only need to inline the *blocks dependency graph* within the caller

Grey-boxing

Some actions can be gathered without forbidding correct feedback loops:

- find such a *(minimal) set of blocks* together with their inter-dependencies:

  this is called the *(Optimal) Static Scheduling Problem*

- only need to inline the *blocks dependency graph* within the caller

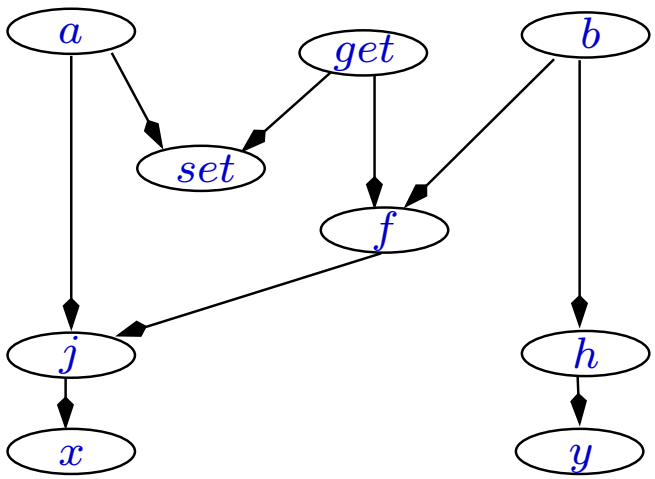

Grey-boxing

Some actions can be gathered without forbidding correct feedback loops:

- find such a *(minimal) set of blocks* together with their inter-dependencies:

  this is called the *(Optimal) Static Scheduling Problem*

- only need to inline the *blocks dependency graph* within the caller

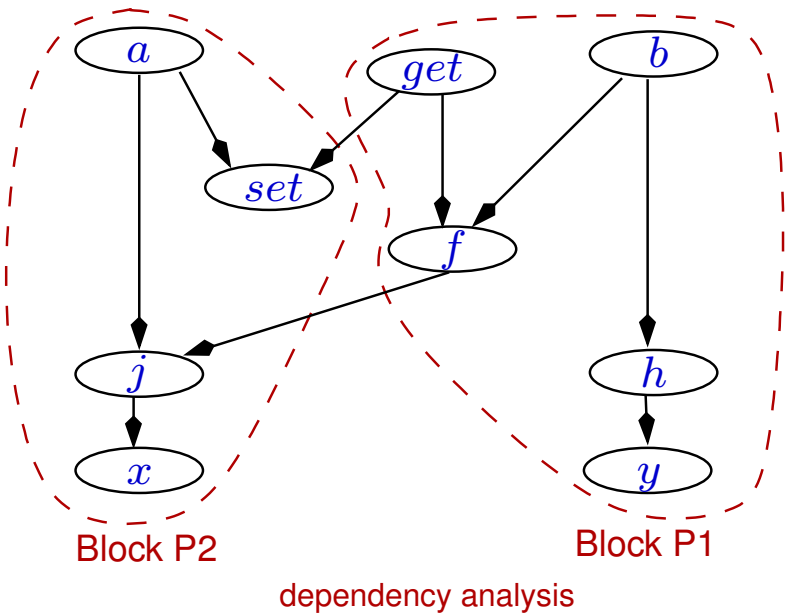

Grey-boxing

Some actions can be gathered without forbidding correct feedback loops:

- find such a *(minimal) set of blocks* together with their inter-dependencies: this is called the *(Optimal) Static Scheduling Problem*
- only need to inline the *blocks dependency graph* within the caller

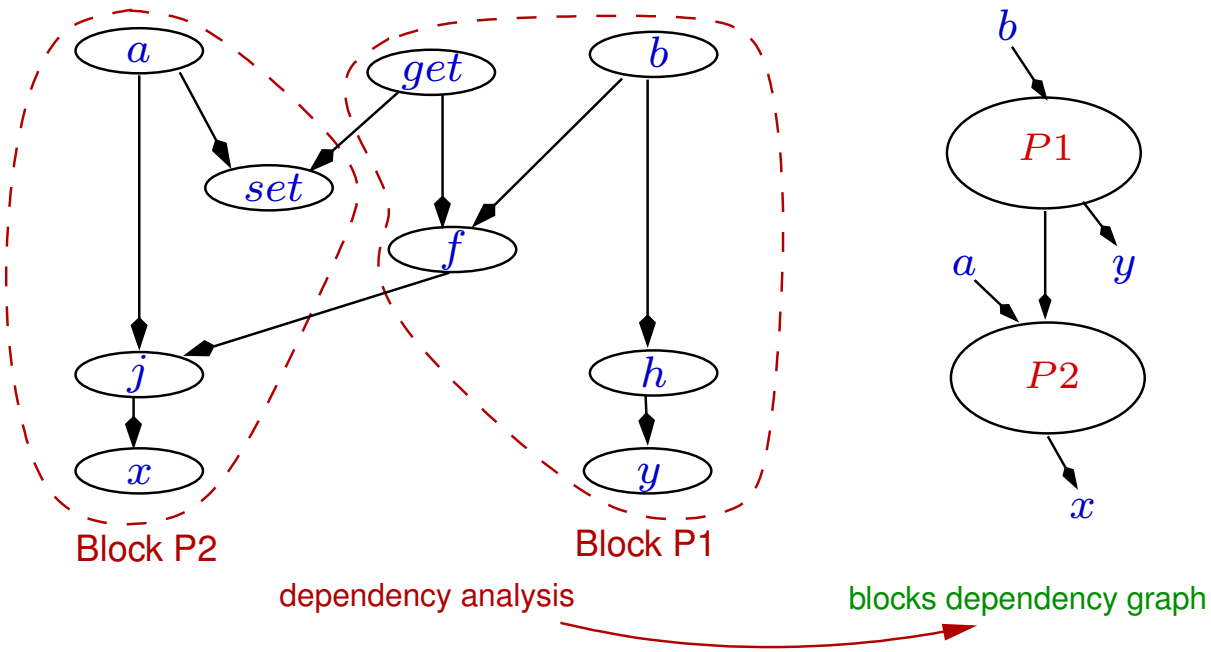

Grey-boxing

Some actions can be gathered without forbidding correct feedback loops:

- find such a *(minimal) set of blocks* together with their inter-dependencies:

  this is called the *(Optimal) Static Scheduling Problem*

- only need to inline the *blocks dependency graph* within the caller

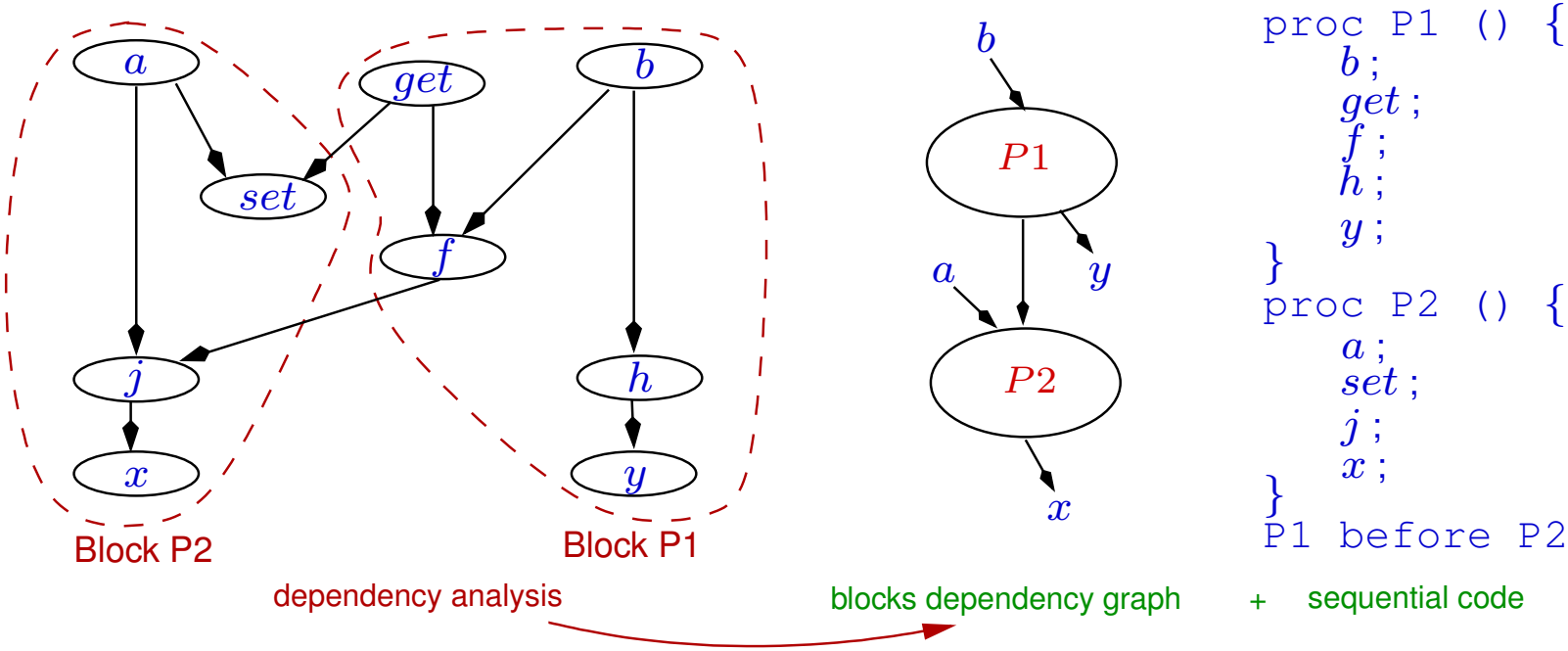

Modularity

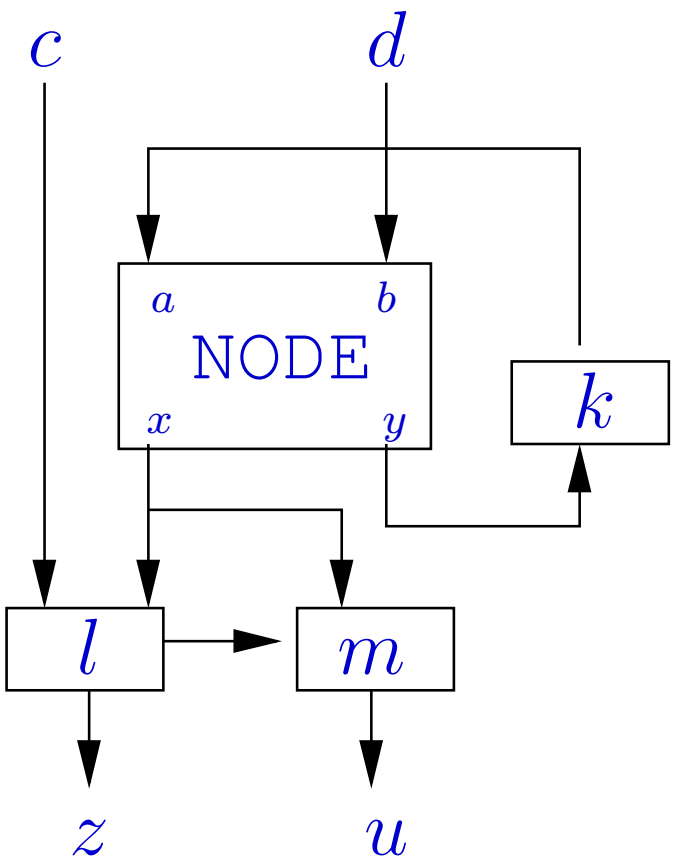

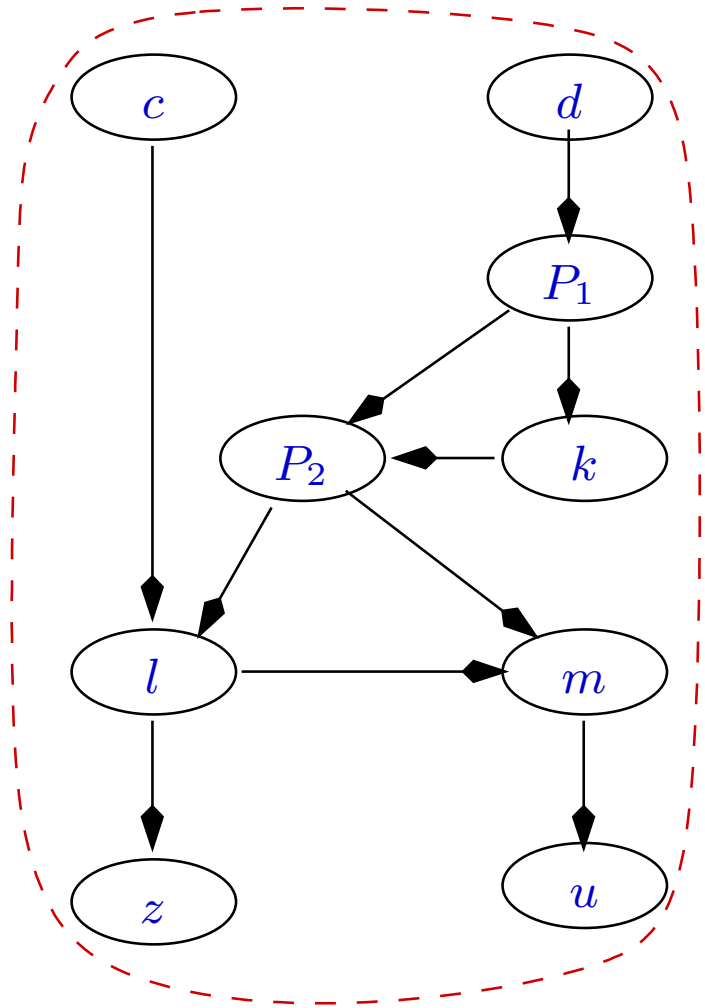


```
proc P ()
{
  c ;
  d ;
  P1 ;
  k ;
  P2 ;
  l ;
  m ;
  z ;
  u ;
}
```

State of the Art

- Separate compilation of LUSTRE [Raymond, 1988]: *non optimal*
- Compilation/code distribution of SIGNAL [Benveniste *et al*, 90's]: *more general: conditional scheduling, not optimal*
- More recently, [Lublinerman, Szegedy and Tripakis, POPL'09]: *optimal, proof of NP-hardness, iterative search of the optimal solution through 3-SAT encoding*.

State of the Art

- Separate compilation of LUSTRE [Raymond, 1988]: *non optimal*
- Compilation/code distribution of SIGNAL [Benveniste *et al*, 90's]: *more general: conditional scheduling, not optimal*
- More recently, [Lublinerman, Szegedy and Tripakis, POPL'09]: *optimal, proof of NP-hardness, iterative search of the optimal solution through 3-SAT encoding*.

This work addresses the Optimal Static Scheduling Problem (OSS):

- proposes an encoding of the problem based on input/output analysis which gives:

  ↪ in (most) cases, an optimal solution in polynomial time

  ↪ or a 3-sat simplified encoding.

- practical experiments show that the 3-sat solving is almost never necessary

Formalization of the Problem

Definition: Abstract Data-flow Networks

A system $(A, I, O, \preceq)$*:*

1. *a finite set of actions* A*,*
2. *a subset of inputs* $I \subseteq A$*,*
3. *a subset of output* $O \subseteq A$ *(not necessarily disjoint from* I*)*
4. *and a partial order* $\preceq$ *to represent precedence relation between actions.*

Definition: Compatibility

Two actions $x, y \in A$ *are said to be (static scheduling) compatible and this is written* $x \chi y$ *when the following holds:*

$$x \chi y \stackrel{def}{=} \forall i \in I, \forall o \in O, ((i \preceq x \wedge y \preceq o) \Rightarrow (i \preceq o)) \wedge ((i \preceq y \wedge x \preceq o) \Rightarrow (i \preceq o))$$

If two nodes are incompatible, gathering them into the same block creates an extra input/output dependency, and then forbids a possible feedback loop

Formalization of the goal

The goal is to find an *equivalence relation* (the set of blocks) implying compatibility plus a *dependence order* between blocks, that is, a *preorder relation*

Formalization of the goal

The goal is to find an *equivalence relation* (the set of blocks) implying compatibility plus a *dependence order* between blocks, that is, a *preorder relation*

Definition: (Optimal) Static Scheduling

A static scheduling over $(A, \preceq, I, O)$ *is a relation* $\precsim$ *satisfying:*

(SS-0) $\precsim$ *is a* pre-order *(reflexive, transitive)*

(SS-1) $x \preceq y \Rightarrow x \precsim y$

(SS-2) $\forall i \in I, \forall o \in O, \;\; i \precsim o \;\Leftrightarrow\; i \preceq o$

Formalization of the goal

The goal is to find an *equivalence relation* (the set of blocks) implying compatibility plus a *dependence order* between blocks, that is, a *preorder relation*

Definition: (Optimal) Static Scheduling

A static scheduling over $(A, \preceq, I, O)$ *is a relation* $\precsim$ *satisfying:*

(SS-0) $\precsim$ *is a* pre-order *(reflexive, transitive)*

(SS-1) $x \preceq y \Rightarrow x \precsim y$

(SS-2) $\forall i \in I, \forall o \in O, \;\; i \precsim o \;\Leftrightarrow\; i \preceq o$

Corrolary: let $\precsim$ be a S.S. and $(x \simeq y) \Leftrightarrow (x \precsim y \wedge y \precsim x)$ the associated equivalence, then $\simeq$ *implies* χ .

Formalization of the goal

The goal is to find an *equivalence relation* (the set of blocks) implying compatibility plus a *dependence order* between blocks, that is, a *preorder relation*

Definition: (Optimal) Static Scheduling

A static scheduling over $(A, \preceq, I, O)$ *is a relation* $\precsim$ *satisfying:*

(SS-0) $\precsim$ *is a* pre-order *(reflexive, transitive)*

(SS-1) $x \preceq y \Rightarrow x \precsim y$

(SS-2) $\forall i \in I, \forall o \in O, \quad i \precsim o \;\Leftrightarrow\; i \preceq o$

Corrolary: let $\precsim$ be a S.S. and $(x \simeq y) \Leftrightarrow (x \precsim y \wedge y \precsim x)$ the associated equivalence, then $\simeq$ *implies* χ .

Moreover, a Static Scheduling is optimal iff:

(SS-3) $\simeq$ *has a minimal number of classes.*

Theoretical Complexity

- Lublinerman, Szegedy and Tripakis proved OSS to be NP-hard through a reduction to the *Minimal Clique Cover (MCC)* problem
- Since the OSS problem is an optimization problem whose associated decision problem is — *does it exist a solution with k classes?* —, they solve it iteratively by searching for a solution with $k = 1, 2, \ldots$ such as:

$\hookrightarrow$ for each k, encode the decision problem as a Boolean formula;

$\hookrightarrow$ solve it using a SAT solver

However, real programs do not reveal such complexity

- this complexity seems to happen for programs with a large number of inputs and outputs with complex and unusual dependences between them
- can we identify simple cases by analyzing input/output dependences?

Theoretical Complexity

The OSS problem encodes the **Minimal Clique Cover** (MCC) problem and is thus NP-hard, i.e., an OSS solver solves MCC.

Remark:

OSS is an **optimization problem** [see Garey and Johnson, 79] where the corresponding decision problem is: *does-it exist a solution with k classes?* Thus, a solution can be searched iteratively by trying $k = 1, 2, ...$

Minimal clique cover (MCC), in terms of relations

let L be a a finite set, $\leftrightarrow$ a symmetric relation (i.e. given a non oriented graph), find a maximal equivalence relation $\simeq$ included in $\leftrightarrow$.

From MCC to OSS

Let $(L, \leftrightarrow)$ be the data of a MCC problem, we build an instance $(A = L \uplus X, \preceq, I = X, O = X)$, by introducing a set of new input/output edges (X), and dependencies ($\preceq$) as follow:

- for each x in L, we have 4 extra variables io_x^1, io_x^2, oi_x^1 and oi_x^2, with the following dependencies:

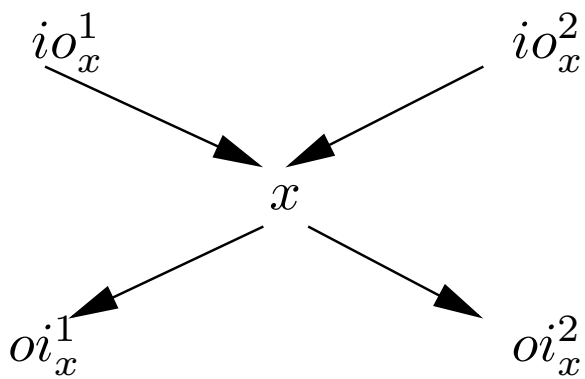

- **N.B.** it enforces any extra variable to be incompatible with any other variable

From MCC to OSS (cont'd)

- for each $x \leftrightarrow y$, we add 8 dependencies:

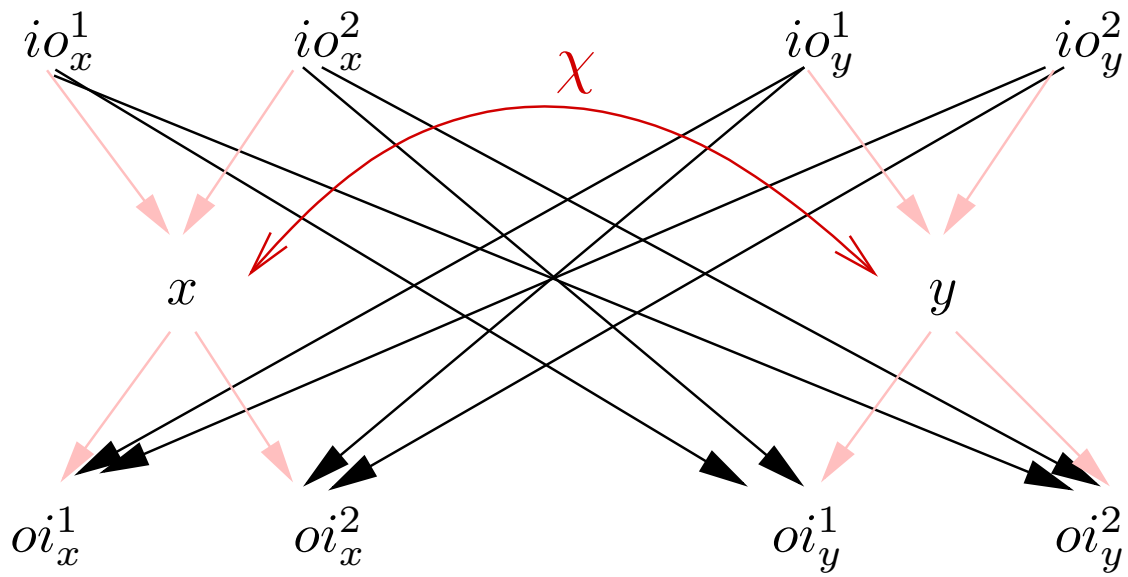

- **N.B.** it enforces local variables to be compatible iff $x \leftrightarrow y$)

We call this OSS instance the X-encoding of the MCC problem.

From MCC to OSS (cont'd)

It is easily proven that:

- whatever be $\simeq$ an (optimal) solution of the MCC problem, then $\precsim = \simeq \cup \preceq$ is an optimal solution of X-encoded problem,
- whatever be $\precsim$ an (optimal) solution of the X-encoded problem, then the associated equivalence $\simeq$ is an optimal solution of the clique cover problem.

Conclusion:

- compatibility relations are **as general** as symmetric relations, thus NP-hardness.
- however, OSS instances that meet the general case have a large number of input and outputs with unusual input/output dependences

Analyse these input/output dependences to build a more efficient algorithm

Input/output Analysis

Input (resp. output) pre-orders

Let $\mathcal{I}$ (resp. $\mathcal{O}$) be the input (resp. output) function:

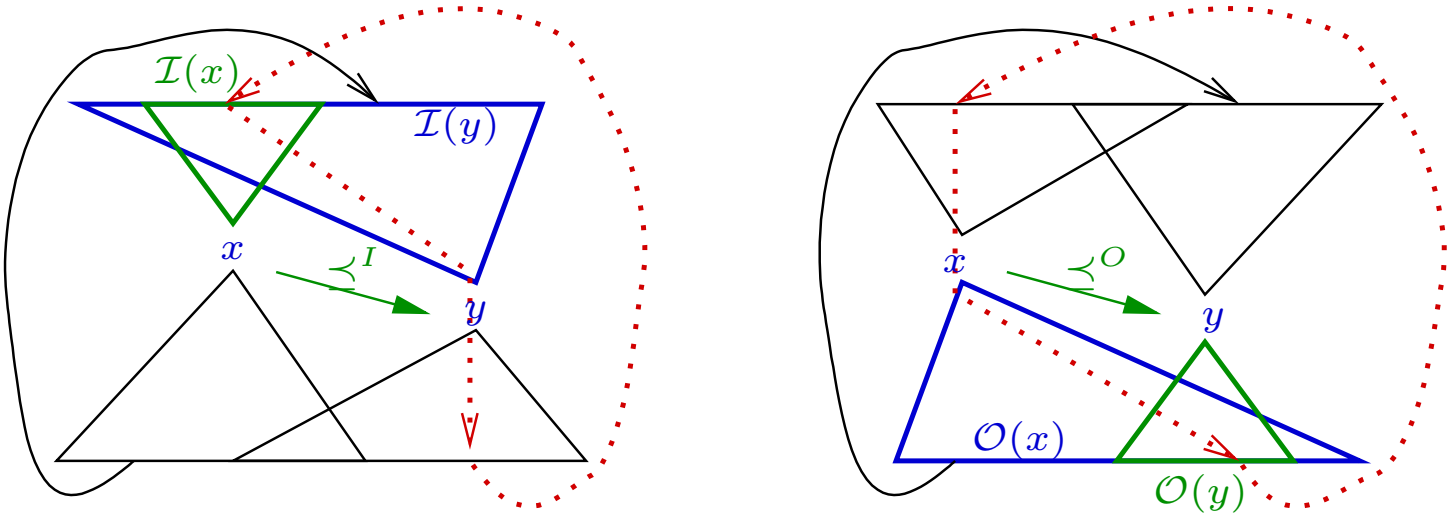

It is *never the case* that x should be computed after y if either:

- $\mathcal{I}(x) \subseteq \mathcal{I}(y)$, noted $x \precsim^I y$, which is a valid of SS, (inclusion of inputs),
- $\mathcal{O}(y) \subseteq \mathcal{O}(x)$, noted $x \precsim^O y$, which is a valid SS. (reverse inclusion of outputs),

Input/output preorder

An even more precise preorder can be build by considering input preorder over output preorder:

- $\mathcal{I}_{\mathcal{O}}(x) = \{i \in I \mid i \precsim^{O} x\}$
- $x \precsim^{I_O} y \;\Leftrightarrow\; \mathcal{I}_{\mathcal{O}}(x) \subseteq \mathcal{I}_{\mathcal{O}}(y)$,
- $x \simeq^{I_O} y \;\Leftrightarrow\; \mathcal{I}_{\mathcal{O}}(x) = \mathcal{I}_{\mathcal{O}}(y)$

N.B. a similar reasoning leads to the output/input preorder.

Properties

- $\precsim^{I_O}$ is a valid SS,
- moreover, it is *optimal for the inputs/outputs*:

$$\forall x, y \in I \cup \mathcal{O} \;\; x \simeq^{I_O} y \Leftrightarrow x \chi\, y$$

- it follows that, in any optimal solution, input/output that are compatible are necessarily in the same class (see proof in the paper)

Input-Set Encoding

- In any solution, the class of a node can be characterized by a subset of inputs or *key*: intuitivelly this key is the set of inputs that are computed before or with the node.
- As shown before, the only possible key for an input or output node x is $\mathcal{I}_{\mathcal{O}}(x)$

How to formalize what can be the key of an internal node?

Input-Set Encoding

- In any solution, the class of a node can be characterized by a subset of inputs or *key*: intuitivelly this key is the set of inputs that are computed before or with the node.
- As shown before, the only possible key for an input or output node x is $\mathcal{I}_{\mathcal{O}}(x)$

How to formalize what can be the key of an internal node?

Definition: KI-encoding

A KI-enc. is function $\mathcal{K} : A \mapsto 2^I$ *which associate a* key *to every node such that:*

(KI-1) $\forall x \in I \cup O; \mathcal{K}(x) = \mathcal{I}_{\mathcal{O}}(x)$

(KI-2) $\forall x, y \; x \preceq y \;\Rightarrow\; \mathcal{K}(x) \subseteq \mathcal{K}(y)$

Moreover:

(KI-opt) it is optimal if the image set is minimal.

Solving the KI-encoding

A system of (in)equations with a variable K_x for each $x \in A$:

- $K_x = \mathcal{I}_{\mathcal{O}}(x)$ for $x \in I \cup O$
- $\bigcup_{y \to x} K_y \subseteq K_x \subseteq \bigcap_{x \to z} K_z$ otherwise
  where $\to$ is the dependency graph relation (a concise representation of $\preceq$)

KI-encoding *vs* Static Scheduling

- a solution of KI ”is” a solution of SS (modulo key inclusion)
- any solution of SS *is not* a solution of KI (e.g, $\preceq$ itself, in general)
- but, *any optimal solution of SS* is also an optimal solution of KI (to the absurd, via Input/output preorder).

In other terms: the KI formulation is better than the SS one: it has less solutions, but does not miss any optimal one.

KI-encoding *vs* Static Scheduling

- a solution of KI "is" a solution of SS (modulo key inclusion)
- any solution of SS *is not* a solution of KI (e.g, $\preceq$ itself, in general)
- but, *any optimal solution of SS* is also an optimal solution of KI (to the absurd, via Input/output preorder).

In other terms: the KI formulation is better than the SS one: it has less solutions, but does not miss any optimal one.

Complexity of the encoding

- $O(n \cdot m^2 \cdot (\log m^2))$ where n is the number of actions, m the maximum number of input/outputs.
- That is, $O(n \cdot m \cdot B(m) \cdot A(m))$, where B is the cost of union/intersection between sets and A, the cost of insertion in a set.

Solving the KI-encoding: Example

$$K_a = \{a, b\} \quad K_b = \{b\} \quad K_x = \{a, b\} \quad K_y = \{b\}$$

$$\begin{aligned}
\emptyset \subseteq \quad & K_{get} \quad \subseteq K_{set} \cap K_f \\
K_a \cup K_{get} \subseteq \quad & K_{set} \quad \subseteq \{a, b\} \\
K_b \cup K_{get} \subseteq \quad & K_f \quad \subseteq K_j \\
K_a \cup K_f \subseteq \quad & K_j \quad \subseteq K_x \\
K_b \subseteq \quad & K_h \quad \subseteq K_y
\end{aligned}$$

- The system to solve:
  - ↪ a variable K_x for each key
  - ↪ input/output keys are *mandatory*
  - ↪ set intervals for others

Solving the KI-encoding: Example

$$K_a = \{a,b\} \quad K_b = \{b\} \quad K_x = \{a,b\} \quad K_y = \{b\}$$

$$\begin{aligned}
\emptyset \subseteq \quad & K_{\mathit{get}} && \subseteq \{a,b\} \cap K_{\mathit{set}} \cap K_f \\
K_a \cup K_{\mathit{get}} \cup \{a,b\} \subseteq \quad & K_{\mathit{set}} && \subseteq \{a,b\} \\
K_b \cup K_{\mathit{get}} \cup \{b\} \subseteq \quad & K_f && \subseteq \{a,b\} \cap K_j \\
K_a \cup K_f \cup \{a,b\} \subseteq \quad & K_j && \subseteq \{a,b\} \cap K_x \\
K_b \cup \{b\} \subseteq \quad & K_h && \subseteq \{b\} \cap K_y
\end{aligned}$$

- Compute lower and upper bounds:

$\hookrightarrow$ $k_x^{\bot} = \bigcup_{y \to x} k_y^{\bot}$ and $k_x^{\top} = \bigcap_{x \to z} k_z^{\top}$

Solving the KI-encoding: Example

$$K_a = \{a, b\} \quad K_b = \{b\} \quad K_x = \{a, b\} \quad K_y = \{b\}$$

$$\begin{aligned}
\emptyset \subseteq \quad & K_{\mathit{get}} \quad \subseteq \{a, b\} \cap K_f \\
\{a, b\} \subseteq \quad & K_{\mathit{set}} \quad \subseteq \{a, b\} \\
\{b\} \subseteq \quad & K_f \quad \subseteq \{a, b\} \\
\{a, b\} \subseteq \quad & K_j \quad \subseteq \{a, b\} \\
\{b\} \subseteq \quad & K_h \quad \subseteq \{b\}
\end{aligned}$$

- Compute lower and upper bounds:

$\hookrightarrow$ $k_x^{\perp} = \bigcup_{y \longrightarrow x} k_y^{\perp}$ and $k_x^{\top} = \bigcap_{x \longrightarrow z} k_z^{\top}$

- Propagate, simplify: new equations, constant intervals, others

Solving the KI-encoding: Example

$$K_a = \{a, b\} \quad K_b = \{b\} \quad K_x = \{a, b\} \quad K_y = \{b\}$$

$$\begin{aligned} \emptyset &= K_{get} \\ \{a, b\} &= K_{set} \\ \{b\} &= K_f \\ \{a, b\} &= K_j \\ \{b\} &= K_h \end{aligned}$$

- Check for "obvious" solutions:

  $\hookrightarrow$ $\mathcal{K}^{\perp} : x \rightarrow k_x^{\perp}$

  $\hookrightarrow$ strategy: compute as soon as possible

  $\hookrightarrow$ not "proven" optimal: $\emptyset$ not mandatory

Solving the KI-encoding: Example

$$K_a = \{a, b\} \quad K_b = \{b\} \quad K_x = \{a, b\} \quad K_y = \{b\}$$

$$\begin{aligned} K_{\textit{get}} &= \{a, b\} \\ K_{\textit{set}} &= \{a, b\} \\ K_f &= \{a, b\} \\ K_j &= \{a, b\} \\ K_h &= \{b\} \end{aligned}$$

- Check for "obvious" solutions:

  ↪ $\mathcal{K}^\top : x \to k_x^\top$

  ↪ strategy: compute as late as possible

  ↪ *optimal:* all keys are mandatory

Dealing with complex systems

Let $\mathcal{S}$ be the simplified system, X be the set of actions whose key is still unknown, $\kappa_1, \cdots, \kappa_c$ be the c mandatory keys:

- try to find a solution with $c + 0$ classes:
  - $\hookrightarrow$ build the formula: $\mathcal{S} \bigwedge_{x \in X} \bigvee_{j=1}^{j=c} (K_x = \kappa_j)$
  - $\hookrightarrow$ call a SAT-solver...
- if it fails, try to find a solution with $c + 1$ classes:
  - $\hookrightarrow$ introduce a new variable B_1,
  - $\hookrightarrow$ build the formula: $\mathcal{S} \bigwedge_{x \in X} (\bigvee_{j=1}^{j=c} (K_x = \kappa_j) \vee (K_x = B_1))$
  - $\hookrightarrow$ call a SAT-solver...
- if it fails, try to find a solution with $c + 2$ classes, etc.

A few more examples

The “M” shape

```
node f(a, b: t) returns (x, y: t);
  var m: t;
  let x = f1(a, pre m);
      y = f2(b, pre m);
      m = f3(a, b);
  tel;
```

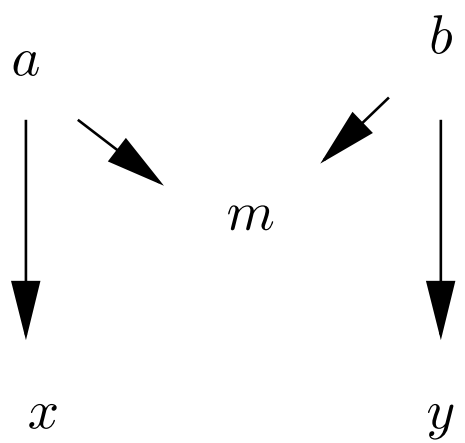

$$K_a = K_x = \{a\}$$
$$K_b = K_y = \{b\}$$
$$K_m = \{a, b\}$$

The K encoding gives three mandatory classes; this is enough.

The “M/W” shape

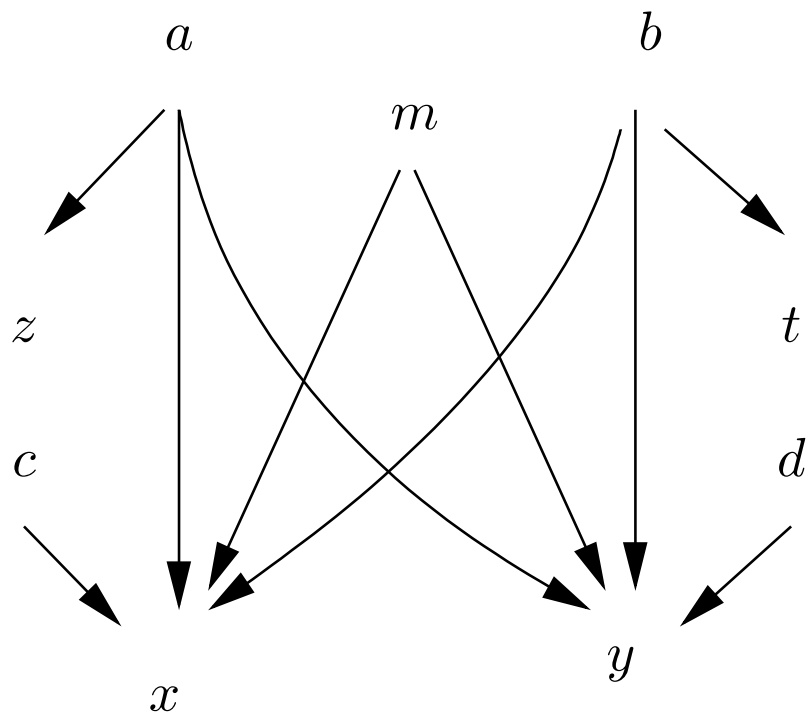

$$K_a = K_z = \{a\}$$
$$K_b = K_t = \{b\}$$
$$K_c = K_x = \{a, b, c\}$$
$$K_d = K_y = \{a, b, d\}$$

$$\emptyset \subseteq K_m \subseteq \{a, b\}$$

An optimal solution is found by taking either $K_m = \{a\}$ or $K_m = \{b\}$.

The problem is easy because there is a single constraint on K_m.

The Generalised “M/W” shape

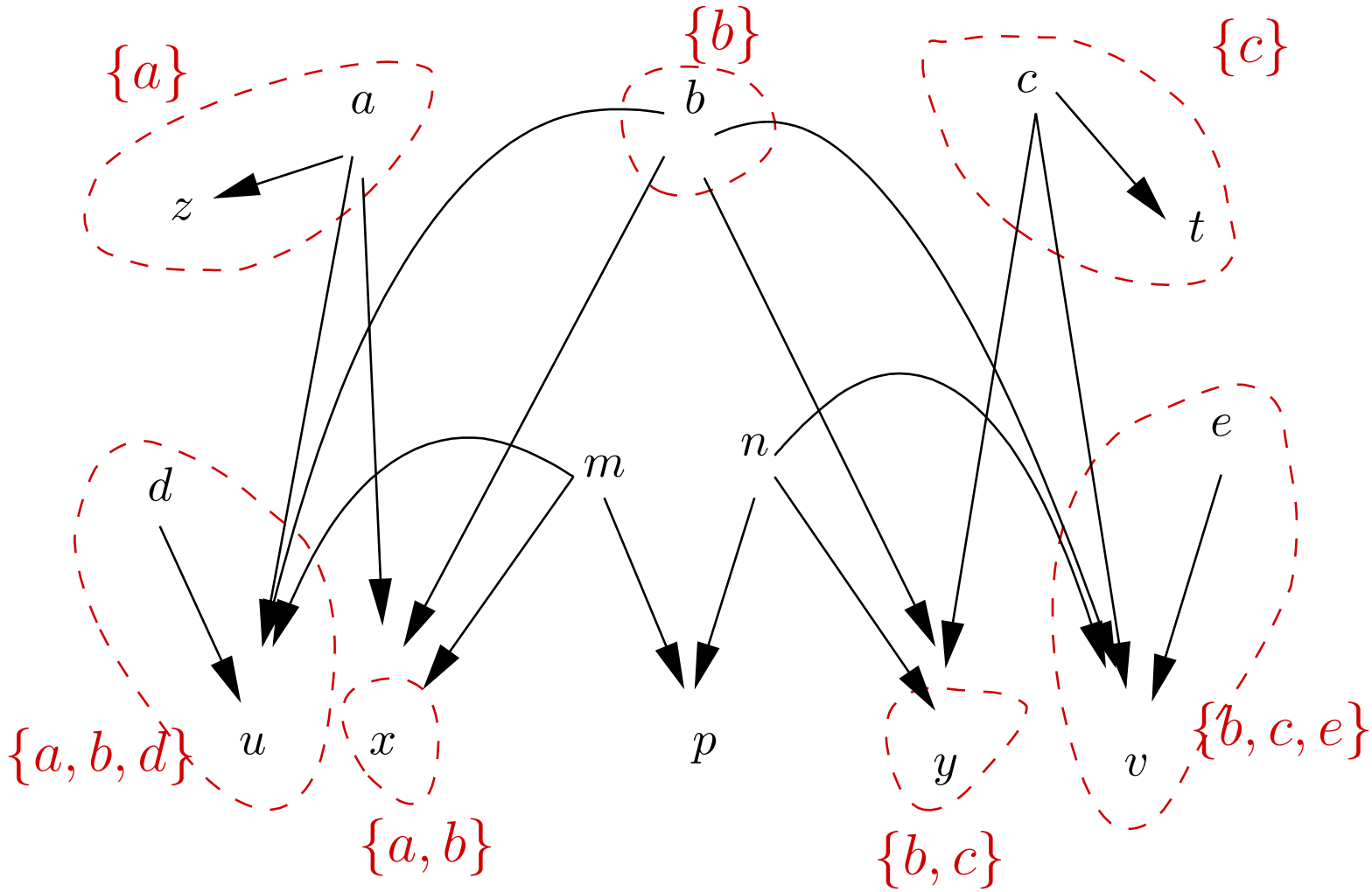

$$\emptyset \subseteq K_m \subseteq \{a,b\} \cap K_p$$
$$\emptyset \subseteq K_n \subseteq \{b,c\} \cap K_p$$
$$K_m \cup K_n \subseteq K_p \subseteq \{a,b,c,d,e\}$$

Several optimal choices can be made, that do not require extra classes. E.g.:

- $K_m = K_n = K_p = \{b\}$
- $K_m = \{a\}, K_n = \{b\}, K_p = \{a, b\}$

These optimal solutions cannot be obtained by considering variables one by one.

- $K_m = \{a\}$ or $K_n = \{c\}$ are locally a good choice

but once done, there is no solution for p other than $K_p = \{a, c\}$.

This adds an extra class.

When several variables are related, they must be considered “all together”. This illustrates why the problem is computationally hard.

Experimentation

The prototype

- extract dependency informations from a LUSTRE (or SCADE) program
- build the simplified KI-encoded system (polynomial)
- check for obvious solutions (linear)
- if no obvious solution, iteratively call a Boolean solver.

We have considered three benchmarks made of the components comming from:

- the whole SCADE V4 standard library

  $\hookrightarrow$ reusable programs, modular compilation is relevant

- two large industrial applications

  $\hookrightarrow$ not reusable programs, less relevant

  $\hookrightarrow$ but bigger programs, more likely to be *complex*

Results Overview

	# prgs	# nodes	# i/o	cpu	triv. (# blocks)	solved (# blocks)	other (# blocks)
SCADE lib.	223	av. 12	2 to 9	0.14s	65 (1)	158 (1 or 2)	
Airbus 1	27	av. 25	2 to 19	0.025s	8 (1)	19 (1 to 4)	
Airbus 2	125	av. 65 (up to 600)	2 to 26	0.2s	41 (1 to 3)	83 (1 to 4)	1^*

- as expected: programs in SCADE lib. are (small) and then simple
- but also in Airbus, even with ”big” interface
- 1^*: not really ”complex” (solved by a heuristic: intersection of $k_x^\top$)
- the whole test takes 0.35 seconds (CoreDuo 2.8Ghz, MacOS X); 350 LO(Caml).
- Source code in OCaml is given in Appendix of [4].

Conclusion

- Optimal Static Scheduling is theoretically NP-hard
- thus it could be solved, through a suitable encoding, with a general purpose Sat-solver
- A polynomial analysis of inputs/outputs can give:
  - ↪ non trivial lower and upper bounds on the number of classes
  - ↪ a proved optimal solution in some cases
  - ↪ a optimized SAT-encoding that emphazises the sources of complexity
- Experiments show that complex instances are hard to find in real examples

References

*

References

[1] M. R. Garey and D. S. Johnson. *Computers and Intractability - A guide to the Theory of NP-completeness*. Freeman, New-York, 1979.

[2] R. Lublinerman, C. Szegedy, and S. Tripakis. Modular Code Generation from Synchronous Block Diagrams — Modularity vs. Code Size. In *ACM Principles of Programming Languages (POPL)*, 2009.

[3] Marc Pouzet and Pascal Raymond. Modular Static Scheduling of Synchronous Data-flow Networks: An efficient symbolic representation. In *ACM International Conference on Embedded Software (EMSOFT'09)*, Grenoble, France, October 2009.

[4] Marc Pouzet and Pascal Raymond. Modular Static Scheduling of Synchronous Data-flow Networks: An efficient symbolic representation. *Journal of Design Automation for Embedded Systems*, 3(14):165–192, 2010. Special issue of selected papers from `http://esweek09.inrialpes.fr/`Embedded System Week. Extended version of [3].

[5] Pascal Raymond. Compilation séparée de programmes Lustre. Technical report, Projet SPECTRE, IMAG, July 1988.